Work Order ID 64612

Thursday, December 09, 2010 10:19:40 AM

Item ID: D206-642-151 Right hand M.

Revision ID:

Item Name: Replacement Skidtube

Start Date: 12/9/2010 **Start Qty:** 1.00

Required Date: 1/14/2011 **Req'd Qty:** 1.00

Reference:

Accept

Setup Start

Stop

Cust Item ID:

Customer:

Run Start

Stop

Approvals: **Process Plan:** PL **Date:** 10-12-9 **Tooling:** **Date:**

QC: **Date:** **SPC (Y/N):** **Date:**

Sequence ID/ Work Center ID	Operation Description	Set Up/ Run Hours	Tool ID	Tool #	Plan Code	Accept Qty	Reject Qty	Reject Number	Insp. Stamp
100	DOCUMENT CONTROL	0.00							N/A
DC	Memo	0.00							
Document Control	Photocopy bluefile & type labels per PPP D206-642-151 CHG001								

Draw Nbr	Revision Nbr

Right hand

Dart Aerospace Ltd

W/O:	WORK ORDER CHANGES						
DATE	STEP	PROCEDURE CHANGE	By	Date	Qty	Approval Chief Eng / Prod Mgr	Approval QC Inspector

Part No: _____ **PAR #:** _____ **Fault Category:** _____ **NCR:** Yes No **DQA:** _____ **Date:** _____

Resolution: _____ **Disposition:** _____ **QA: N/C Closed:** _____ **Date:** _____

NCR:	WORK ORDER NON-CONFORMANCE (NCR)							
DATE	STEP	Description of NC Section A	Corrective Action Section B			Verification Section C	Approval Chief Eng	Approval QC Inspector
			Initial Chief Eng	Action Description Chief Eng	Sign & Date			

NOTE: Date & initial all entries

H:\fFORMS\Quality Assurance\approved QA\NCRWO RevE

Work Order ID 64612

Thursday, December 09, 2010 10:19:40 AM

Item ID: D206-642-151 **Accept** **Setup Start** **Stop**

Revision ID:

Item Name: Replacement Skidtube

Start Date: 12/9/2010 **Start Qty:** 1.00 **Cust Item ID:**

Required Date: 1/14/2011 **Req'd Qty:** 1.00 **Customer:**

Reference:

Run Start **Stop**

Approvals: **Process Plan:** _____ **Date:** _____ **Tooling:** _____ **Date:** _____

QC: _____ **Date:** _____ **SPC (Y/N):** _____ **Date:** _____

Sequence ID/ Work Center ID	Operation Description	Set Up/ Run Hours	Tool ID	Tool #	Plan Code	Accept Qty	Reject Qty	Reject Number	Insp. Stamp
110		0.00							
	Skidtubes								
Skidtubes		0.00							
Skidtubes									

Memo

1-Deburr Fwd edge of tube

2- Remove ridge on inside of Fwd edge of tube as per Dwg D3804

3-Weld Fwd Cap as per Dwg D3804. Use aluminum rod. Grind D2647 to fit as required.

Pick:

Qty ☐Part Number☐ Description☐Batch

A/R☐☐ Aluminum Rod☐ M11385/M116577 BE 11/05/09

4-Grind weld flush to cap on top surface only. BE 11/05/09

5-Cut Aft end as per dwg D3804 from front of tube and Deburr

6-Remove inner indexing ridge on Aft end of skidtube as per Dwg D3804

7-Open holes for Aft end cap as per Dwg D3804 with #30 Drill Bit using DT8025.

8-Drill pilot holes using Dt 8167. BE 11/05/09

9-Locate DT8732 from inner Aft saddle hole & 3rd crossbolt hole. Insert D3286-1 doubler using DT8732 & D206-642-241-T1, then locating doubler off of 3/16" holes, cleco DT8732 & doubler leaving DT8732 for added support.

10- Drill D3286-1 doubler rivet holes in tube using # 40 drill, spot drilling doubler at the same time.

11-5-6

Dart Aerospace Ltd

W/O:		WORK ORDER CHANGES					
DATE	STEP	PROCEDURE CHANGE	By	Date	Qty	Approval Chief Eng / Prod Mgr	Approval QC Inspector

Part No: _____ **PAR #:** _____ **Fault Category:** _____ **NCR:** Yes No **DQA:** _____ **Date:** _____

Resolution: _____ **Disposition:** _____ **QA: N/C Closed:** _____ **Date:** _____

NCR:		WORK ORDER NON-CONFORMANCE (NCR)						
DATE	STEP	Description of NC Section A	Corrective Action Section B			Verification Section C	Approval Chief Eng	Approval QC Inspector
			Initial Chief Eng	Action Description Chief Eng	Sign & Date			

NOTE: Date & initial all entries

H:\fFORMS\Quality Assurance\approved QA\NCRWO RevE

Work Order ID 64612

Thursday, December 09, 2010 10:19:40 AM

Item ID: D206-642-151 **Accept** **Setup Start**

Revision ID: **Stop**

Item Name: Replacement Skidtube

Start Date: 12/9/2010 **Start Qty:** 1.00 **Cust Item ID:**

Required Date: 1/14/2011 **Req'd Qty:** 1.00 **Customer:**

Reference:

Run Start

Approvals: **Process Plan:** _____ **Date:** _____ **Tooling:** _____ **Date:** _____

Stop

QC: _____ **Date:** _____ **SPC (Y/N):** _____ **Date:** _____

Sequence ID/ Work Center ID	Operation Description	Set Up/ Run Hours	Tool ID	Tool #	Plan Code	Accept Qty	Reject Qty	Reject Number	Insp. Stamp
	11-Working from the center out, drill # 30 holes into D3286-1 doubler. Cleco each hole as it is being drilled. Verify angle of holes to accommodate rivet heads. 12-Remove 3/16" cleco's only and open GHW holes to Ø0.500" as per Dwg D3804 13-Remove D3286-1 doubers, identify orientation, deburr, then attach them to the workorder 14-Remove indexing edge using DT8741 as per Dwg D3804 15-C'sink GHW rivet holes as per Dwg D3804								
120 QC Quality Control	QC6- Inspect dimensions to drawing	0.00							
	Memo	0.00							

BE 11/05/09

8 11/05/10

FC

Dart Aerospace Ltd

W/O:		WORK ORDER CHANGES					
DATE	STEP	PROCEDURE CHANGE	By	Date	Qty	Approval Chief Eng / Prod Mgr	Approval QC Inspector

Part No: _____ **PAR #:** _____ **Fault Category:** _____ **NCR:** Yes No **DQA:** _____ **Date:** _____

Resolution: _____ **Disposition:** _____ **QA: N/C Closed:** _____ **Date:** _____

NCR:		WORK ORDER NON-CONFORMANCE (NCR)						
DATE	STEP	Description of NC Section A	Corrective Action Section B			Verification Section C	Approval Chief Eng	Approval QC Inspector
			Initial Chief Eng	Action Description Chief Eng	Sign & Date			

NOTE: Date & initial all entries

Work Order ID 64612

Thursday, December 09, 2010 10:19:40 AM

Item ID: D206-642-151 **Accept** **Setup Start** **Stop**

Revision ID:

Item Name: Replacement Skidtube

Start Date: 12/9/2010 **Start Qty:** 1.00 **Cust Item ID:**

Required Date: 1/14/2011 **Req'd Qty:** 1.00 **Customer:**

Reference:

Run Start **Stop**

Approvals: **Process Plan:** _____ **Date:** _____ **Tooling:** _____ **Date:** _____

QC: _____ **Date:** _____ **SPC (Y/N):** _____ **Date:** _____

Sequence ID/ Work Center ID	Operation Description	Set Up/ Run Hours	Tool ID	Tool #	Plan Code	Accept Qty	Reject Qty	Reject Number	Insp. Stamp
130	Skidtubes	0.00							
Skidtubes	**Memo**	0.00							
Skidtubes	1-Open crossbolt holes to Ø0.3125" 2- Open Aft cap hole #6. ****no wearplate holes for this skidtube**** 3-Deburr tube and blow out chips from inside the tube								
140	Chemical Conversion Coat per QSI005 4.1	0.00							
HandFinish	**Memo**	0.00							B 11/05/10
Hand Finishing									
150	QC3- Inspect Part Finish	0.00				1	0		BG 11/05/10
QC	**Memo**	0.00							
Quality Control									

Dart Aerospace Ltd

W/O:		WORK ORDER CHANGES					
DATE	STEP	PROCEDURE CHANGE	By	Date	Qty	Approval Chief Eng / Prod Mgr	Approval QC Inspector

Part No: _____ **PAR #:** _____ **Fault Category:** _____ **NCR:** Yes No **DQA:** _____ **Date:** _____

Resolution: _____ **Disposition:** _____ **QA: N/C Closed:** _____ **Date:** _____

NCR:		WORK ORDER NON-CONFORMANCE (NCR)						
DATE	STEP	Description of NC Section A	Corrective Action Section B			Verification Section C	Approval Chief Eng	Approval QC Inspector
			Initial Chief Eng	Action Description Chief Eng	Sign & Date			

NOTE: Date & initial all entries

H:\fFORMS\Quality Assurance\approved QA\NCRWO RevE

Work Order ID 64612

Thursday, December 09, 2010 10:19:40 AM

Item ID: D206-642-151 **Accept** **Setup Start**

Revision ID: **Stop**

Item Name: Replacement Skidtube

Start Date: 12/9/2010 **Start Qty:** 1.00 **Cust Item ID:**

Required Date: 1/14/2011 **Req'd Qty:** 1.00 **Customer:**

Reference:

Run Start

Approvals: **Process Plan:** _____ **Date:** _____ **Tooling:** _____ **Date:** _____

Stop

QC: _____ **Date:** _____ **SPC (Y/N):** _____ **Date:** _____

Sequence ID/ Work Center ID	Operation Description	Set Up/ Run Hours	Tool ID	Tool #	Plan Code	Accept Qty	Reject Qty	Reject Number	Insp. Stamp
160		0.00							
Skidtubes	Skidtubes								
Skidtubes	**Memo**	0.00							
	1-Open holes to finished size as per Dwg D3804, (without cutting fluid)								
	2-C'sink crossbolt spacer holes as per Dwg D3804(without cutting fluid)								
	3-Deburr and blow out all chips from inside the tube								
170	QC6- Inspect dimensions to drawing	0.00							
QC	**Memo**	0.00							
Quality Control									

11.05.10

DP 11-5-10

Dart Aerospace Ltd

W/O:		WORK ORDER CHANGES					
DATE	STEP	PROCEDURE CHANGE	By	Date	Qty	Approval Chief Eng / Prod Mgr	Approval QC Inspector

Part No: _____ **PAR #:** _____ **Fault Category:** _____ **NCR:** Yes No **DQA:** _____ **Date:** _____

Resolution: _____ **Disposition:** _____ **QA: N/C Closed:** _____ **Date:** _____

NCR:		WORK ORDER NON-CONFORMANCE (NCR)						
DATE	STEP	Description of NC Section A	Corrective Action Section B			Verification Section C	Approval Chief Eng	Approval QC Inspector
			Initial Chief Eng	Action Description Chief Eng	Sign & Date			

NOTE: Date & initial all entries

H:\fFORMS\Quality Assurance\approved QA\NCRWO RevE

Work Order ID 64612

Thursday, December 09, 2010 10:19:40 AM

Item ID: D206-642-151 **Accept** **Setup Start** **Stop**

Revision ID:

Item Name: Replacement Skidtube

Start Date: 12/9/2010 **Start Qty:** 1.00 **Cust Item ID:**

Required Date: 1/14/2011 **Req'd Qty:** 1.00 **Customer:**

Reference:

Run Start **Stop**

Approvals: **Process Plan:** _____ **Date:** _____ **Tooling:** _____ **Date:** _____

QC: _____ **Date:** _____ **SPC (Y/N):** _____ **Date:** _____

Sequence ID/ Work Center ID	Operation Description	Set Up/ Run Hours	Tool ID	Tool #	Plan Code	Accept Qty	Reject Qty	Reject Number	Insp. Stamp
180	Skidtubes	0.00							
Skidtubes	**Memo**	0.00							
Skidtubes	1-Locate, install and rivet doublers as per Dwg D3804. Micro-shave rivets as required								
	2-Bond D2654-3 web in place as per QSI 015. Ensure holes line up.Allow 12 Hrs. cure time before cutting Start Date:☐ 11-5-17 ☐Time:☐ 1115 ☐ Finish Date:☐ 11/5/16 ☐Time:☐ 9:40am Pick: Qty ☐Part Number☐Description☐Batch A/R☐☐Sikaflex-291☐ M116948☐☐ Sikaflex expire date:☐ 12-1-15								
190	QC5- Inspect part completeness to step on W/O	0.00							
QC	**Memo**	0.00							
Quality Control									

11.05.10

11-5-17

Sulos/18

40

Dart Aerospace Ltd

W/O:	WORK ORDER CHANGES						
DATE	STEP	PROCEDURE CHANGE	By	Date	Qty	Approval Chief Eng / Prod Mgr	Approval QC Inspector

Part No: _____ **PAR #:** _____ **Fault Category:** _____ **NCR:** Yes No **DQA:** _____ **Date:** _____

Resolution: _____ **Disposition:** _____ **QA: N/C Closed:** _____ **Date:** _____

NCR:	WORK ORDER NON-CONFORMANCE (NCR)							
DATE	STEP	Description of NC Section A	Corrective Action Section B			Verification Section C	Approval Chief Eng	Approval QC Inspector
			Initial Chief Eng	Action Description Chief Eng	Sign & Date			

NOTE: Date & initial all entries

H:\fFORMS\Quality Assurance\approved QA\NCRWO RevE

Work Order ID 64612

Thursday, December 09, 2010 10:19:40 AM

Item ID: D206-642-151 **Accept** **Setup Start** **Stop**

Revision ID:

Item Name: Replacement Skidtube

Start Date: 12/9/2010 **Start Qty:** 1.00 **Cust Item ID:**

Required Date: 1/14/2011 **Req'd Qty:** 1.00 **Customer:**

Reference:

Run Start **Stop**

Approvals: **Process Plan:** _____ **Date:** _____ **Tooling:** _____ **Date:** _____

QC: _____ **Date:** _____ **SPC (Y/N):** _____ **Date:** _____

Sequence ID/ Work Center ID	Operation Description	Set Up/ Run Hours	Tool ID	Tool #	Plan Code	Accept Qty	Reject Qty	Reject Number	Insp. Stamp
200	Skidtubes	0.00							
Skidtubes		0.00							
Skidtubes	**Memo**								

1-remove alodine from around hole and prepare for welding BE 11/05/8

2-Prep per QSI 005 and Insert D2649 crossbolt spacers. Weld as per QSI 004 and Dwg D3804. Remember to back drill each hole to 0.25" before welding the other side. Use aluminum rod. BE 11/05/8

Pick:

Qty□Part Number□Description□Batch

A/R□□Aluminum Rod□ MN1385

3-Grind welds flush as per Dwg D3804. JB 11/05/19

4-Using DT8733, insert (2) D3286-3 spacers as per QSI 004 and Dwg D3804. Remember to back drill each hole to Ø0.402" before welding other side. Use SS rod as required.

A/R□SS Rod□ NONE BE 11/05/25

5-Counterbore 5/16" x 0.750" deep except 7th hole from Aft end as per Dwg D3804. Deburr BE 11/05/25

Dart Aerospace Ltd

W/O:		WORK ORDER CHANGES					
DATE	STEP	PROCEDURE CHANGE	By	Date	Qty	Approval Chief Eng / Prod Mgr	Approval QC Inspector

Part No: _____ PAR #: _____ Fault Category: _____ NCR: Yes No DQA: _____ Date: _____

Resolution: _____ Disposition: _____ QA: N/C Closed: _____ Date: _____

NCR:		WORK ORDER NON-CONFORMANCE (NCR)						
DATE	STEP	Description of NC Section A	Corrective Action Section B			Verification Section C	Approval Chief Eng	Approval QC Inspector
			Initial Chief Eng	Action Description Chief Eng	Sign & Date			

NOTE: Date & initial all entries

H:\fFORMS\Quality Assurance\approved QA\NCRWO RevE

Work Order ID 64612

Thursday, December 09, 2010 10:19:40 AM

Item ID: D206-642-151 **Accept** **Setup Start** **Stop**

Revision ID:

Item Name: Replacement Skidtube

Start Date: 12/9/2010 **Start Qty:** 1.00 **Cust Item ID:**

Required Date: 1/14/2011 **Req'd Qty:** 1.00 **Customer:**

Reference:

Run Start **Stop**

Approvals: **Process Plan:** _____ **Date:** _____ **Tooling:** _____ **Date:** _____

QC: _____ **Date:** _____ **SPC (Y/N):** _____ **Date:** _____

Sequence ID/ Work Center ID	Operation Description	Set Up/ Run Hours	Tool ID	Tool #	Plan Code	Accept Qty	Reject Qty	Reject Number	Insp. Stamp
210		0.00							
HandFinish	HandFinishing					1			11/05/27
Hand Finishing	**Memo** Install D2680-041 Nut Plate as per Dwg D3804	0.00							
220	~~QC9~~- Inspect visual per QSI004- Fusion Welds QC10	0.00							
QC	**Memo**	0.00	11/05/27						
Quality Control									
230	QC5- Inspect part completeness to step on W/O	0.00							
QC	**Memo**	0.00	11/05/27						
Quality Control									

Dart Aerospace Ltd

W/O: 64612		WORK ORDER CHANGES					
DATE	STEP	Perm. change PROCEDURE CHANGE	By	Date	Qty	Approval Chief Eng / Prod Mgr	Approval QC Inspector
11/5/27	#220	change to QC10 inspection done on B64610					11/05/27

Part No: D206-642-151 PAR #: _____ Fault Category: _____ NCR: Yes No DQA: _____ Date: _____

Resolution: _____ Disposition: _____ QA: N/C Closed: _____ Date: _____

NCR:		WORK ORDER NON-CONFORMANCE (NCR)						
DATE	STEP	Description of NC Section A	Corrective Action Section B			Verification Section C	Approval Chief Eng	Approval QC Inspector
			Initial Chief Eng	Action Description Chief Eng	Sign & Date			

NOTE: Date & initial all entries

H:\fFORMS\Quality Assurance\approved QA\NCRWO RevE

Work Order ID 64612

Thursday, December 09, 2010 10:19:40 AM

Item ID: D206-642-151 **Accept** **Setup Start**

Revision ID: **Stop**

Item Name: Replacement Skidtube

Start Date: 12/9/2010 **Start Qty:** 1.00 **Cust Item ID:**

Required Date: 1/14/2011 **Req'd Qty:** 1.00 **Customer:**

Reference:

Run Start

Approvals: **Process Plan:** _____ **Date:** _____ **Tooling:** _____ **Date:** _____

Stop

QC: _____ **Date:** _____ **SPC (Y/N):** _____ **Date:** _____

Sequence ID/ Work Center ID	Operation Description	Set Up/ Run Hours	Tool ID	Tool #	Plan Code	Accept Qty	Reject Qty	Reject Number	Insp. Stamp
240	Pressure Wash per QSI005 4.3	0.00							
HandFinish						1X	Ø	M-f	11/05/30
Hand Finishing	**Memo**	0.00							
250	White Gloss(Ref:4.3.5.1) per QSI005 4.3-Alum	0.00							
Powdercoat						1X	Ø	M-f	11/05/30
Powder Coating	**Memo**	0.00							
M116964	START TIME: 11:15 OVEN TEMPERATURE: 320 oF FINISH TIME: 11:45								
260	QC3- Inspect Part Finish	0.00							
QC						1	¢	M	6/06/a
Quality Control	**Memo**	0.00							

Dart Aerospace Ltd

W/O:		WORK ORDER CHANGES					
DATE	STEP	PROCEDURE CHANGE	By	Date	Qty	Approval Chief Eng / Prod Mgr	Approval QC Inspector

Part No: _____ **PAR #:** _____ **Fault Category:** _____ **NCR:** Yes No **DQA:** _____ **Date:** _____

Resolution: _____ **Disposition:** _____ **QA: N/C Closed:** _____ **Date:** _____

NCR:		WORK ORDER NON-CONFORMANCE (NCR)						
DATE	STEP	Description of NC Section A	Corrective Action Section B			Verification Section C	Approval Chief Eng	Approval QC Inspector
			Initial Chief Eng	Action Description Chief Eng	Sign & Date			

NOTE: Date & initial all entries

H:\fFORMS\Quality Assurance\approved QA\NCRWO RevE

Work Order ID 64612

Thursday, December 09, 2010 10:19:40 AM

Item ID: D206-642-151 **Accept** **Setup Start**

Revision ID: **Stop**

Item Name: Replacement Skidtube

Start Date: 12/9/2010 **Start Qty:** 1.00 **Cust Item ID:**

Required Date: 1/14/2011 **Req'd Qty:** 1.00 **Customer:**

Reference:

Run Start

Approvals: **Process Plan:** _____ **Date:** _____ **Tooling:** _____ **Date:** _____ **Stop**

QC: _____ **Date:** _____ **SPC (Y/N):** _____ **Date:** _____

Sequence ID/ Work Center ID	Operation Description	Set Up/ Run Hours	Tool ID	Tool #	Plan Code	Accept Qty	Reject Qty	Reject Number	Insp. Stamp
270	HandFinishing	0.00				1	0		12/06/10
HandFinish	**Memo**	0.00							
Hand Finishing	1-Install D2651-3 O-Rings on D2651-1 plugs with Petroleum Jelly and install plugs as per Dwg D3804. Clean excess adhesive.								
280	HandFinishing	0.00				1	0		12/06/10
HandFinish	**Memo**	0.00							
Hand Finishing	1-Install D2646 Aft Cap and seal with Sikaflex. Clean excess adhesive A/R□□Sikaflex-291□ M1116945□□ Sikaflex expire date:□ 12/01								
	2- Install wearplate as per dwg								
	2-Wing Walk as per Dwg D3804 and QSI 005 4.4□ Batch: M117315								

Dart Aerospace Ltd

W/O:		WORK ORDER CHANGES					
DATE	STEP	PROCEDURE CHANGE	By	Date	Qty	Approval Chief Eng / Prod Mgr	Approval QC Inspector

Part No: _____ **PAR #:** _____ **Fault Category:** _____ **NCR:** Yes No **DQA:** _____ **Date:** _____

Resolution: _____ **Disposition:** _____ **QA: N/C Closed:** _____ **Date:** _____

NCR:		WORK ORDER NON-CONFORMANCE (NCR)						
DATE	STEP	Description of NC Section A	Corrective Action Section B			Verification Section C	Approval Chief Eng	Approval QC Inspector
			Initial Chief Eng	Action Description Chief Eng	Sign & Date			

NOTE: Date & initial all entries

H:\FORMS\Quality Assurance\approved QA\NCRWO RevE

Work Order ID 64612

Thursday, December 09, 2010 10:19:40 AM

Item ID: D206-642-151 **Accept** **Setup Start** **Stop**

Revision ID:

Item Name: Replacement Skidtube

Start Date: 12/9/2010 **Start Qty:** 1.00 **Cust Item ID:**

Required Date: 1/14/2011 **Req'd Qty:** 1.00 **Customer:**

Reference:

Run Start **Stop**

Approvals: **Process Plan:** _____ **Date:** _____ **Tooling:** _____ **Date:** _____

QC: _____ **Date:** _____ **SPC (Y/N):** _____ **Date:** _____

Sequence ID/ Work Center ID	Operation Description	Set Up/ Run Hours	Tool ID	Tool #	Plan Code	Accept Qty	Reject Qty	Reject Number	Insp. Stamp
290 QC Quality Control	QC3- Inspect Part Finish **Memo**	0.00 0.00							
300 QC Quality Control	QC5- Inspect part completeness to step on W/O **Memo**	0.00 0.00							
310 Packaging Packaging	Packaging **Memo** Identify and pack for shipping as per PPP D206-642-151 Location: PPP Rev:	0.00 0.00							

Dart Aerospace Ltd

W/O:		WORK ORDER CHANGES					
DATE	STEP	PROCEDURE CHANGE	By	Date	Qty	Approval Chief Eng / Prod Mgr	Approval QC Inspector

Part No: _____ **PAR #:** _____ **Fault Category:** _____ **NCR:** Yes No **DQA:** _____ **Date:** _____

Resolution: _____ **Disposition:** _____ **QA: N/C Closed:** _____ **Date:** _____

NCR:		WORK ORDER NON-CONFORMANCE (NCR)						
DATE	STEP	Description of NC Section A	Corrective Action Section B			Verification Section C	Approval Chief Eng	Approval QC Inspector
			Initial Chief Eng	Action Description Chief Eng	Sign & Date			

NOTE: Date & initial all entries

H:\fFORMS\Quality Assurance\approved QA\NCRWO RevE

Work Order ID 64612

Thursday, December 09, 2010 10:19:40 AM

Item ID: D206-642-151 **Accept** **Setup Start**

Revision ID: **Stop**

Item Name: Replacement Skidtube

Start Date: 12/9/2010 **Start Qty:** 1.00 **Cust Item ID:**

Required Date: 1/14/2011 **Req'd Qty:** 1.00 **Customer:**

Reference:

Run Start

Approvals: **Process Plan:** _____ **Date:** _____ **Tooling:** _____ **Date:** _____

Stop

QC: _____ **Date:** _____ **SPC (Y/N):** _____ **Date:** _____

Sequence ID/ Work Center ID	Operation Description	Set Up/ Run Hours	Tool ID	Tool #	Plan Code	Accept Qty	Reject Qty	Reject Number	Insp. Stamp
320	QC21- Final Inspection - Work Order Release	0.00							
QC Quality Control	**Memo**	0.00							

11/6/2

MF

11-06-02

Dart Aerospace Ltd

W/O:		WORK ORDER CHANGES					
DATE	STEP	PROCEDURE CHANGE	By	Date	Qty	Approval Chief Eng / Prod Mgr	Approval QC Inspector

Part No: _____ PAR #: _____ Fault Category: _____ NCR: Yes No DQA: _____ Date: _____

Resolution: _____ Disposition: _____ QA: N/C Closed: _____ Date: _____

NCR:		WORK ORDER NON-CONFORMANCE (NCR)						
DATE	STEP	Description of NC Section A	Corrective Action Section B			Verification Section C	Approval Chief Eng	Approval QC Inspector
			Initial Chief Eng	Action Description Chief Eng	Sign & Date			

NOTE: Date & initial all entries

H:\fFORMS\Quality Assurance\approved QA\NCRWO RevE

Picklist Print

Thursday, December 09, 2010 10:19:45 AM

Work Order ID: 64612

Parent Item: D206-642-151

Parent Item Name: Replacement Skidtube

Start Date: 12/9/2010 **Required Date:** 1/14/2011

Start Qty: 1.00 **Required Qty:** 1.00

Comments: IPP REV:A 10.12.08 PER IIN REV.N DD VERF:EC

Component Item ID/ Item Name	Replacement Item ID	Mfg/ Purch	Bin Item	Primary Location	Last Location	Route Seq ID	Unit of Measure	Qty on Hand	Qty per Kit	Total Qty	Qty Issued	Date Issued	Status
D2620		Manufactured	No				Each	9.0000	1	1			
Skidtube, 206 Skidtube													
				Location		**Loc Qty**		**Loc Code**					
				LG		9							
					62684	9							
D3286-1		Manufactured	No				Each	23.0000	2	2			
Doubler													
				Location		**Loc Qty**		**Loc Code**					
				ST050		23							
					52844	23							
D2647		Manufactured	No				Each	57.0000	1	1			
Cap													
				Location		**Loc Qty**		**Loc Code**					
				FP		57							
					55352	57							
CR3212-4-04		Purchased	No				Each	425.0000	52	52			
Cherry Rivet													
				Location		**Loc Qty**		**Loc Code**					
				ST311		425							
					112314	25							
					113749	200							
					115698	200							

116471 52

1 11-5-6

BE 11/05/09

BE 11/05/09

11.05.10

Dart Aerospace Ltd

W/O:		WORK ORDER CHANGES					
DATE	STEP	PROCEDURE CHANGE	By	Date	Qty	Approval Chief Eng / Prod Mgr	Approval QC Inspector

Part No: _____ **PAR #:** _____ **Fault Category:** _____ **NCR:** Yes No **DQA:** _____ **Date:** _____

Resolution: _____ **Disposition:** _____ **QA: N/C Closed:** _____ **Date:** _____

NCR:		WORK ORDER NON-CONFORMANCE (NCR)						
DATE	STEP	Description of NC Section A	Corrective Action Section B			Verification Section C	Approval Chief Eng	Approval QC Inspector
			Initial Chief Eng	Action Description Chief Eng	Sign & Date			

NOTE: Date & initial all entries

H:\fFORMS\Quality Assurance\approved QA\NCRWO RevE

Picklist Print

Thursday, December 09, 2010 10:19:45 AM

Work Order ID: 64612

Parent Item: D206-642-151

Parent Item Name: Replacemen. Skidtube

Start Date: 12/9/2010 **Required Date:** 1/14/2011

Start Qty: 1.00 **Required Qty:** 1.00

D2654-1	Manufactured	No	B64781	Each	0.0000	1	1	11-5-17
Web								
D2649	Manufactured	No		Each	53.0000	19	19	BE 11/05/18 B68507 x19
Cross Bolt Spacer								

Location	Loc Qty	Loc Code
LG	53	
58545	2	
60652	4	
61496	2	
62889	13	
63359	32	

D3286-3	Manufactured	No		Each	7.0000	2	2	BE 11/05/25 B64564 (x2)
Spacer								

Location	Loc Qty	Loc Code
LG	7	
46643	7	

CCR264SS3-3	Purchased	No		Each	330.0000	2	2	
Cherry Rivet								

Location	Loc Qty	Loc Code
ST311	330	
112314	4	
113539	44	
113973	282	
117086		

2 BB

Dart Aerospace Ltd

W/O:	WORK ORDER CHANGES						
DATE	STEP	PROCEDURE CHANGE	By	Date	Qty	Approval Chief Eng / Prod Mgr	Approval QC Inspector

Part No: _____ PAR #: _____ Fault Category: _____ NCR: Yes No DQA: _____ Date: _____

Resolution: _____ Disposition: _____ QA: N/C Closed: _____ Date: _____

NCR:	WORK ORDER NON-CONFORMANCE (NCR)							
DATE	STEP	Description of NC Section A	Corrective Action Section B			Verification Section C	Approval Chief Eng	Approval QC Inspector
			Initial Chief Eng	Action Description Chief Eng	Sign & Date			

NOTE: Date & initial all entries

H:\fFORMS\Quality Assurance\approved QA\NCRWO RevE

Picklist Print

Thursday, December 09, 2010 10:19:45 AM

Work Order ID: 64612

Parent Item: D206-642-151

Parent Item Name: Replacement Skidtube

Start Date: 12/9/2010 **Required Date:** 1/14/2011

Start Qty: 1.00 **Required Qty:** 1.00

CR3212-4-03 Cherry Rivet	Purchased	No	Each	1,873.000	2	2	

Location		Loc Qty	Loc Code	
ST311	110139	1873		2 BB 11/05/27
	110153	35		
	111359	5		
	112314	2		
	114436	448		
	114450	37		
	114859	1346		

D2680-041 Nut Plate	Manufactured	No	Each	20.0000	1	1	

Location		Loc Qty	Loc Code	
ST021	700888	20		1 BB 11/05/27
	~~55366~~	20		

D3805-041 Wearplate Assembly Fwd, Low Gear	Manufactured	No	Each B 64565	0.0000	1	1 (x1) ML 11/06/01	
D3805-045 Wearplate Assembly Aft, Low Gear	Manufactured	No	Each B64566	0.0000	1	1 (x1) ML 11/06/01	
AN3-37A Bolt	Purchased	No	Each	654.0000	7	7 ML 11/06/01	

Location		Loc Qty	Loc Code	
ST353		654		
	105425	154		X7
	111668	500		

Dart Aerospace Ltd

W/O:		WORK ORDER CHANGES					
DATE	STEP	PROCEDURE CHANGE	By	Date	Qty	Approval Chief Eng / Prod Mgr	Approval QC Inspector

Part No: _____ **PAR #:** _____ **Fault Category:** _____ **NCR:** Yes No **DQA:** _____ **Date:** _____

Resolution: _____ **Disposition:** _____ **QA: N/C Closed:** _____ **Date:** _____

NCR:		WORK ORDER NON-CONFORMANCE (NCR)						
DATE	STEP	Description of NC Section A	Corrective Action Section B			Verification Section C	Approval Chief Eng	Approval QC Inspector
			Initial Chief Eng	Action Description Chief Eng	Sign & Date			

NOTE: Date & initial all entries

H:\fFORMS\Quality Assurance\approved QA\NCRWO RevE

Picklist Print

Thursday, December 09, 2010 10:19:45 AM

Work Order ID: 64612

Parent Item: D206-642-151

Parent Item Name: Replacement Skidtube

Start Date: 12/9/2010 **Required Date.** 1/14/2011

Start Qty: 1.00 **Required Qty:** 1.00

AN960JD10	~~NAS1149D0363J~~	Purchased	No	Each	8.0000	7	7	
Washer								

Location		Loc Qty	Loc Code	
ST		6	M116583	X7
	107715	6		
ST335		2		
	105792	2		

MS21042L3		Purchased	No	Each	1,213.000	7	7	
Nut								

Location		Loc Qty	Loc Code	
ST300		1213		
	114784	217	M116540	X7
	115835	996		

D3873-1		Manufactured	No	Each	81.0000	14	14	
Bushing								

Location		Loc Qty	Loc Code	
ST092		70	B64760	X14
	62197	40		
	63314	30		
ST093		11		
	57615	11		

Dart Aerospace Ltd

W/O:		WORK ORDER CHANGES					
DATE	STEP	PROCEDURE CHANGE	By	Date	Qty	Approval Chief Eng / Prod Mgr	Approval QC Inspector

Part No: _____ PAR #: _____ Fault Category: _____ NCR: Yes No DQA: _____ Date: _____

Resolution: _____ Disposition: _____ QA: N/C Closed: _____ Date: _____

NCR:		WORK ORDER NON-CONFORMANCE (NCR)						
DATE	STEP	Description of NC Section A	Corrective Action Section B			Verification Section C	Approval Chief Eng	Approval QC Inspector
			Initial Chief Eng	Action Description Chief Eng	Sign & Date			

NOTE: Date & initial all entries

H:\fFORMS\Quality Assurance\approved QA\NCRWO RevE

Picklist Print

Thursday, December 09, 2010 10:19:45 AM

Work Order ID: 64612

Parent Item: D206-642-151

Parent Item Name: Replacement Skidtube

Start Date: 12/9/2010 **Required Date:** 1/14/2011

Start Qty: 1.00 **Required Qty:** 1.00

AN960JD416	NAS1149D0463J	Purchased	No	Each	30.0000	1	1	
Washer								

Location		Loc Qty	Loc Code	
ST300		24	M117241	X1
	113288	24		
ST356		6		
	115622	6		

D2651-1		Manufactured	No	Each	539.0000	6	6	
Plug								

Location		Loc Qty	Loc Code	
FP		217	1367760	X6
	51530	152		
	62638	65		
fpa		322		
	53349	205		
	57869	117		

D2651-3		Manufactured	No	Each	432.0000	6	6	
O-Ring								

Location		Loc Qty	Loc Code	
FP		432		
	46114	12		
	61962	420		X6

Dart Aerospace Ltd

W/O:		WORK ORDER CHANGES					
DATE	STEP	PROCEDURE CHANGE	By	Date	Qty	Approval Chief Eng / Prod Mgr	Approval QC Inspector

Part No: _____ **PAR #:** _____ **Fault Category:** _____ **NCR:** Yes No **DQA:** _____ **Date:** _____

Resolution: _____ **Disposition:** _____ **QA: N/C Closed:** _____ **Date:** _____

NCR:		WORK ORDER NON-CONFORMANCE (NCR)						
DATE	STEP	Description of NC Section A	Corrective Action Section B			Verification Section C	Approval Chief Eng	Approval QC Inspector
			Initial Chief Eng	Action Description Chief Eng	Sign & Date			

NOTE: Date & initial all entries

H:\fFORMS\Quality Assurance\approved QA\NCRWO RevE

Picklist Print

Thursday, December 09, 2010 10:19:45 AM

Work Order ID: 64612

Parent Item: D206-642-151

Parent Item Name: Replacement Skidtube

Start Date: 12/9/2010 **Required Date:** 1/14/2011

Start Qty: 1.00 **Required Qty:** 1.00

MS27039-4-06 Screw	Purchased	No		Each	95.0000	1	1

Location	Loc Qty	Loc Code
ST292	95	
109061	5	
115460	90	x1

D2646 Aft Cap	Manufactured	No		Each	76.0000	1	1

Location	Loc Qty	Loc Code
FP-4	17	
57332	17	
FP6	5	
52663	3	
63633	2	
Return 2010	54	
62678	54	x1

MS27039-1-08 Screw	Purchased	No		Each	1,364.000	2	2

Location	Loc Qty	Loc Code
ST291	1364	
107378	1	
108077	37	
110835	455	x2
115108	871	

Dart Aerospace Ltd

W/O:		WORK ORDER CHANGES					
DATE	STEP	PROCEDURE CHANGE	By	Date	Qty	Approval Chief Eng / Prod Mgr	Approval QC Inspector

Part No: _____ PAR #: _____ Fault Category: _____ NCR: Yes No DQA: _____ Date: _____

Resolution: _____ Disposition: _____ QA: N/C Closed: _____ Date: _____

NCR:		WORK ORDER NON-CONFORMANCE (NCR)						
DATE	STEP	Description of NC Section A	Corrective Action Section B			Verification Section C	Approval Chief Eng	Approval QC Inspector
			Initial Chief Eng	Action Description Chief Eng	Sign & Date			

NOTE: Date & initial all entries

H:\fFORMS\Quality Assurance\approved QA\NCRWO RevE

Picklist Print

Thursday, December 09, 2010 10:19:45 AM

Work Order ID: 64612

Parent Item: D206-642-151

Parent Item Name: Replacement Skidtube

Start Date: 12/9/2010 **Required Date:** 1/14/2011

Start Qty: 1.00 **Required Qty:** 1.00

AN960JD10L	NAS1149D0332J	Purchased	No	Each	38.0000	2	2	
Washer								

Location	Loc Qty	Loc Code	
ST182	38	AA117246	x2
104885	38		

Dart Aerospace Ltd

W/O:		WORK ORDER CHANGES					
DATE	STEP	PROCEDURE CHANGE	By	Date	Qty	Approval Chief Eng / Prod Mgr	Approval QC Inspector

Part No: _____ **PAR #:** _____ **Fault Category:** _____ **NCR:** Yes No **DQA:** _____ **Date:** _____

Resolution: _____ **Disposition:** _____ **QA: N/C Closed:** _____ **Date:** _____

NCR:		WORK ORDER NON-CONFORMANCE (NCR)						
DATE	STEP	Description of NC Section A	Corrective Action Section B			Verification Section C	Approval Chief Eng	Approval QC Inspector
			Initial Chief Eng	Action Description Chief Eng	Sign & Date			

NOTE: Date & initial all entries

H:\fFORMS\Quality Assurance\approved QA\NCRWO RevE

ITEM	Qty -041	Qty -043	Part Number	Description
1	X		D3804-041	SKIDTUBE ASSEMBLY, 206 A/B LOW
2		X	D3804-043	SKIDTUBE ASSEMBLY, 206 A/B HIGH
5	1	1	D2600-1-160	EXTRUSION
6	1	1	D2646	AFT CAP
7	1	1	D2647	CAP
8	19	20	D2649	CROSS BOLT SPACER
9	6	8	D2651-1	PLUG
10	6	8	D2651-3	O-RING
11		1	D2654-3	WEB
12	1		D2654-1	WEB
13	1	1	D2680-041	NUT PLATE
14	2	2	D3286-1	DOUBLER
15	2	2	D3286-3	STUD
21	2	2	AN960JD10L	WASHER
22	1	1	AN960JD416	WASHER
23	2	2	CCR264SS3-3	RIVET
24	2	2	CR3212-4-03	RIVET
25	52	52	CR3212-4-04	RIVET
26	2	2	MS27039-1-08	SCREW
27	1	1	MS27039-4-06	SCREW

NOTES

1) MATERIAL: N/A
2) FINISH: -CHEMICAL CONVERSION COAT PER DART QSI 005 4.1
   -POWDER COAT WHITE (4.3.5.1) PER DART QSI 005 4.3
3) BLACK ANTI-SKID PAINT AS INDICATED TO 0.5 ABOVE LOCATION RIDGE PER DART QSI 005 4.4
4) TOLERANCES ARE PER DART QSI 018 UNLESS OTHERWISE NOTED
5) UNITS: INCHES UNLESS OTHERWISE NOTED
6) BREAK SHARP EDGES: 0.005 TO 0.010 MAX
7) IDENTIFICATION: NONE
8) WEIGHT: 12.5 lb
9) WELD PER DART QSI 004
10) BENDING: DAMAGE TOLERANCE ON FWD BEND:
    THERE SHOULD BE NO VISIBLE WRINKLES IN THE BEND FROM THE GROUND TO A HEIGHT OF 5 INCHES ABOVE THE GROUND. IT IS ACCEPTABLE TO POLISH OUT GOUGES UP TO 0.020 DEEP IN THE BENT PORTION OF THE TUBE. A MAXIMUM REDUCTION IN DIAMETER OF 0.150" IS ACCEPTABLE IN THE BENT PORTION OF THE TUBE.
11) BOND WEB INTO OUTER TUBE WITH SIKAFLEX-241/-291 ADHESIVE PER DART QSI 015
12) INSERT D2651-1 PLUG C/W D2651-3 O-RING IN HOLES MARKED 'P' (BOTH SIDES OF TUBE)

SHOP COPY
RETURN TO
ENGINEERING
UNCONTROLLED COPY
SUBJECT TO AMENDMENT
WITHOUT NOTICE
WORK ORDER
NO. 64442
DJ 10-12-14

RELEASED
09.03.03
per ECN 09-538

REV.	DESCRIPTION	BY	DATE
A	NEW ISSUE	MB	08.07.07

DESIGN		DART AEROSPACE USA, INC PORT HADLOCK, WA	
DRAWN			
CHECKED		DRAWING NO.	REV. A
MFG. APPR.		D3804	SHEET 1 OF 5
APPROVED		TITLE	SCALE
DE APPR.		SKIDTUBE ASSEMBLY, 206A/B	NTS
DATE	08.07.07		

COPYRIGHT © 2008 BY DART AEROSPACE USA, INC
THIS DOCUMENT IS PRIVATE AND CONFIDENTIAL AND IS SUPPLIED ON THE EXPRESS CONDITION THAT IT IS NOT TO BE USED FOR ANY PURPOSE OR COPIED OR COMMUNICATED TO ANY OTHER PERSON WITHOUT WRITTEN PERMISSION FROM DART AEROSPACE USA, INC.

RELEASED 09.03.03

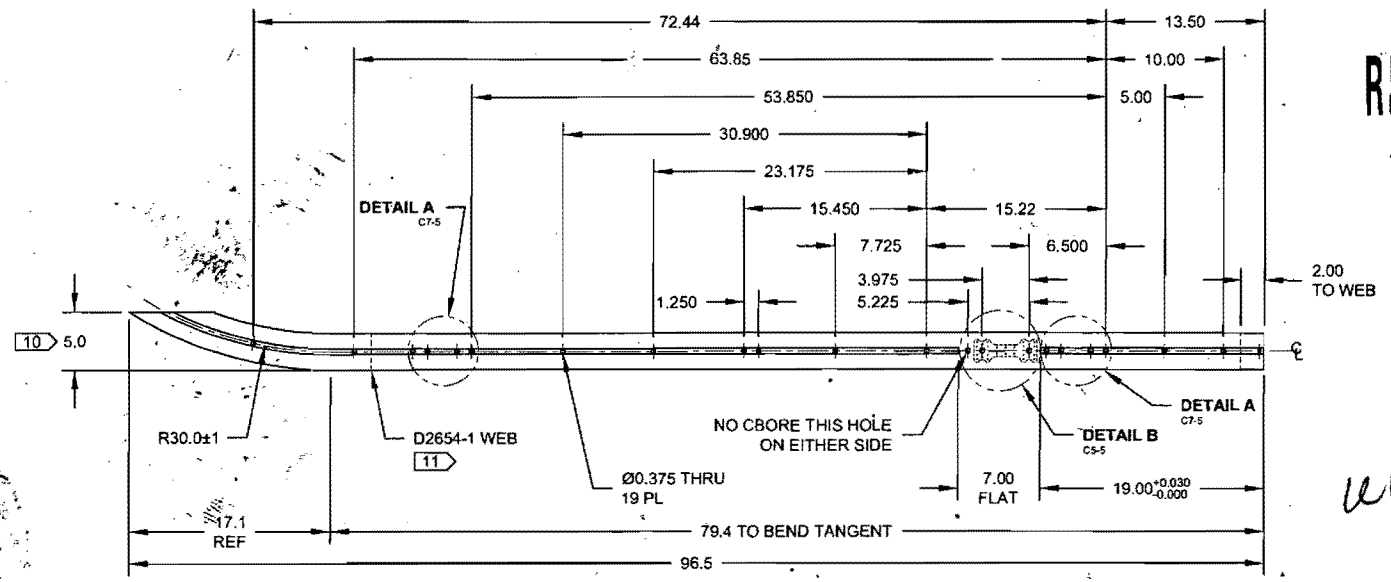

D3804-041 BENDING/DRILLING DETAIL

w/044612

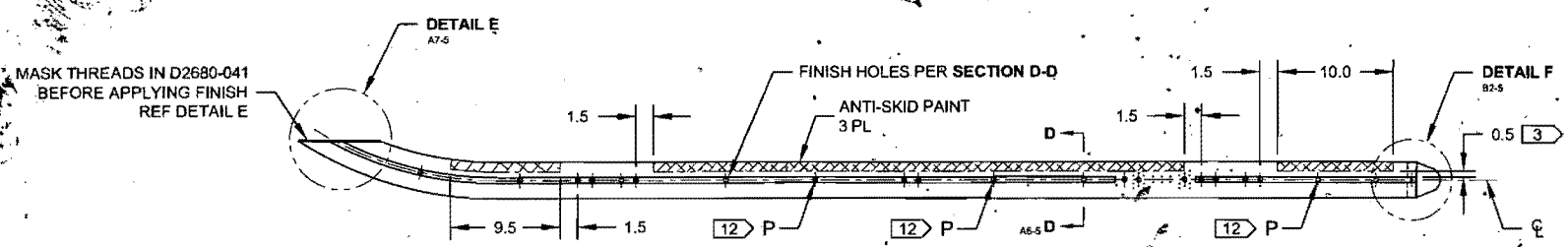

D3804-041 ASSEMBLY/FINISHING DETAIL

DESIGN		DART AEROSPACE USA, INC PORT HADLOCK, WA
DRAWN		
CHECKED		DRAWING NO. REV. A
MFG. APPR.		D3804 SHEET 2 OF 5
APPROVED		TITLE SCALE
DE APPR.		SKIDTUBE ASSEMBLY, 206A/B NTS
DATE	08.07.07	

COPYRIGHT © 2008 BY DART AEROSPACE USA, INC
THIS DOCUMENT IS PRIVATE AND CONFIDENTIAL AND IS SUPPLIED ON THE EXPRESS CONDITION THAT IT IS NOT TO BE USED FOR ANY PURPOSE OR COPIED OR COMMUNICATED TO ANY OTHER PERSON WITHOUT WRITTEN PERMISSION FROM DART AEROSPACE USA, INC.

RELEASED 09.03.07

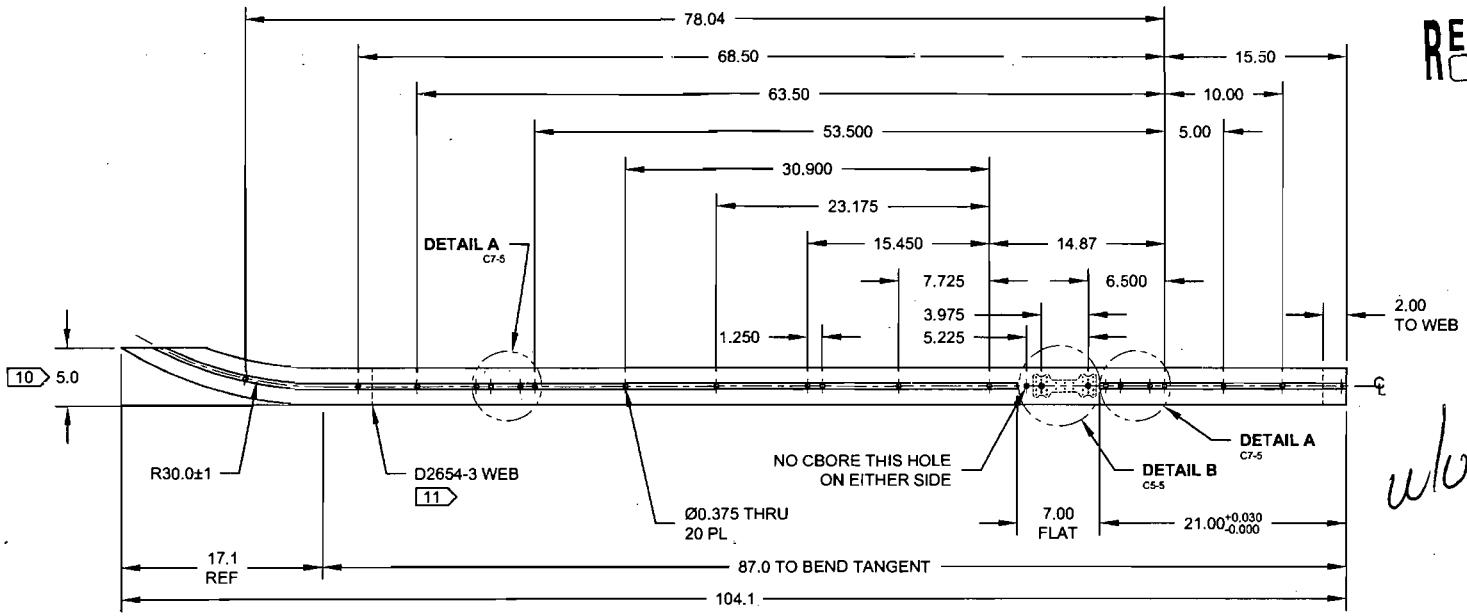

w/o 64612

D3804-043 BENDING/DRILLING DETAIL

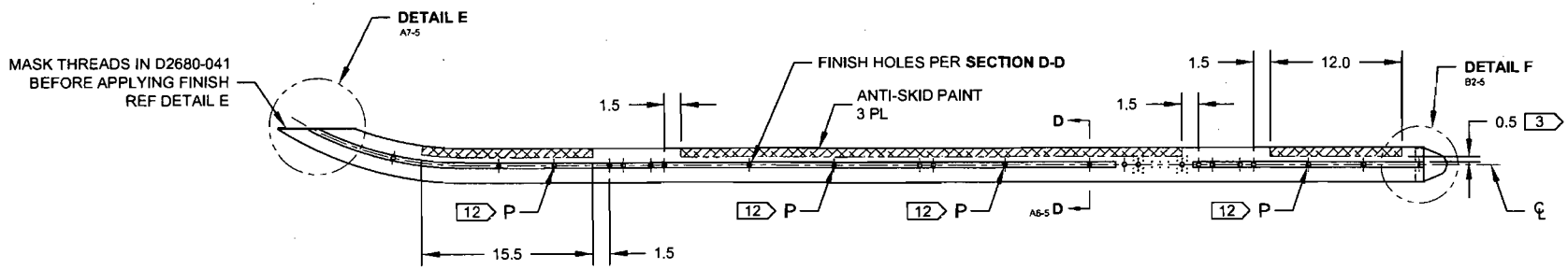

D3804-043 ASSEMBLY/FINISHING DETAIL

DESIGN		**DART AEROSPACE USA, INC** PORT HADLOCK, WA
DRAWN		
CHECKED		DRAWING NO. D3804 — REV. A — SHEET 3 OF 5
MFG. APPR.		
APPROVED		TITLE: SKIDTUBE ASSEMBLY, 206A/B — SCALE: NTS
DE APPR.		
DATE	08.07.07	

COPYRIGHT © 2008 BY DART AEROSPACE USA, INC
THIS DOCUMENT IS PRIVATE AND CONFIDENTIAL AND IS SUPPLIED ON THE EXPRESS CONDITION THAT IT IS NOT TO BE USED FOR ANY PURPOSE OR COPIED OR COMMUNICATED TO ANY OTHER PERSON WITHOUT WRITTEN PERMISSION FROM DART AEROSPACE USA, INC.

RELEASED
09.03.07

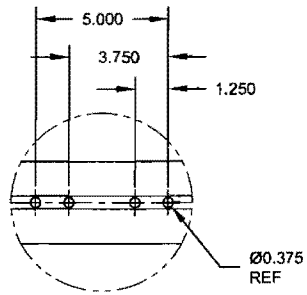

DETAIL A D6-2 C2-2 D6-3 C2-3
SCALE NONE

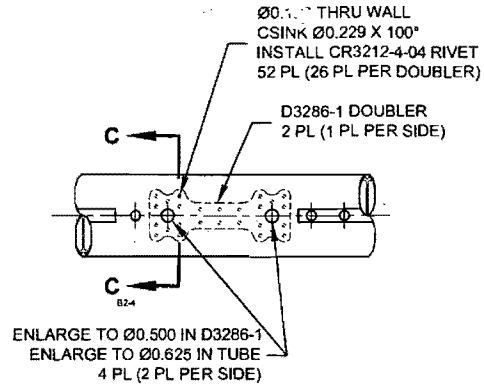

DETAIL B C3-2 C3-3
SCALE NONE

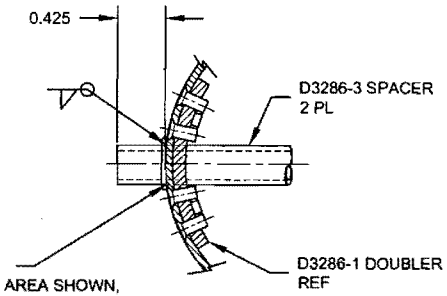

TO INSTALL D3286-1/-3:
1. GRIND OFF FLANGE IN AREA SHOWN, FLUSH WITH OUTSIDE SURFACE OF ROUND TUBE
2. LOCATE & DRILL D3286-1 DOUBLER USING DT3286-1T1
3. ENLARGE HOLES IN D3286-1 TO Ø0.500
4. ENLARGE HOLES IN TUBE TO Ø0.625 AND CHAMFER HOLE 0.03 X 45°
5. RIVET D3286-1 TO TUBE
6. INSERT D3286-3 SPACER
7. WELD IN PLACE AND GRIND FLUSH

W/044612

SECTION C-C C6-4
PARTIAL SECTION
SCALE NONE

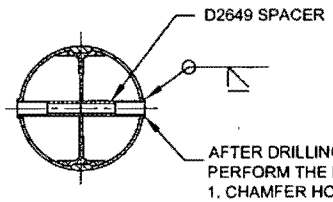

AFTER DRILLING AND BENDING ASSEMBLY
PERFORM THE FOLLOWING FOR Ø0.375 HOLES ONLY:
1. CHAMFER HOLE 0.03 X 45°
2. INSERT D2649 SPACER
3. WELD INTO PLACE AND GRIND FLUSH
4. CBORE TO Ø0.313 X 0.75 DP (EXCEPT WHERE INDICATED)

SECTION D-D A4-2 A4-3
FOR Ø0.375 HOLES ONLY
SCALE NONE

DESIGN		DART AEROSPACE USA, INC PORT HADLOCK, WA	
DRAWN			
CHECKED		DRAWING NO.	REV. A
MFG. APPR.		D3804	SHEET 4 OF 5
APPROVED		TITLE	SCALE
DE APPR.		SKIDTUBE ASSEMBLY, 206A/B	NTS
DATE	08.07.07		

COPYRIGHT © 2003 BY DART AEROSPACE USA, INC
THIS DOCUMENT IS PRIVATE AND CONFIDENTIAL AND IS SUPPLIED ON THE EXPRESS CONDITION THAT IT IS NOT TO BE USED FOR ANY PURPOSE OR COPIED OR COMMUNICATED TO ANY OTHER PERSON WITHOUT WRITTEN PERMISSION FROM DART AEROSPACE USA, INC.

RELEASED 09.03.03

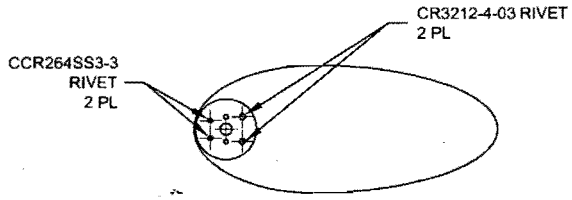

VIEW G-G A7-5
SCALE NONE

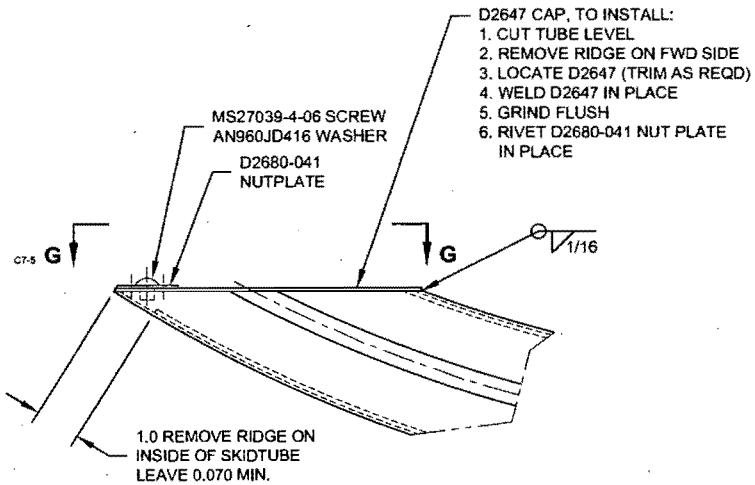

DETAIL E B7-2 B7-3
SCALE NONE

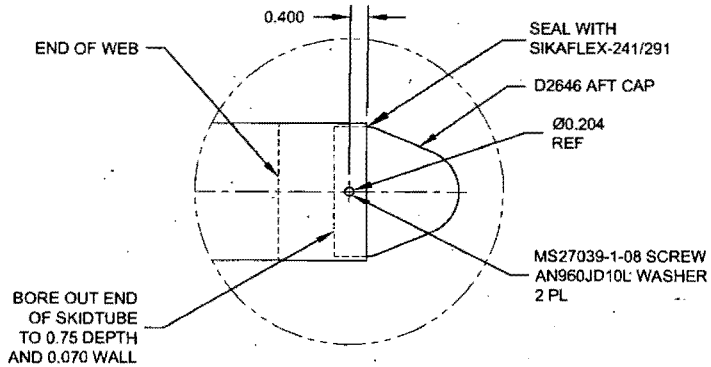

DETAIL F B2-2 B2-3
SCALE NONE

w/064612

DESIGN		**DART AEROSPACE USA, INC** PORT HADLOCK, WA	
DRAWN			
CHECKED		DRAWING NO.	REV. A
MFG. APPR.		D3804	SHEET 5 OF 5
APPROVED		TITLE	SCALE
DE APPR.		SKIDTUBE ASSEMBLY, 206A/B	NTS
DATE	08.07.07		

COPYRIGHT © 2008 BY DART AEROSPACE USA, INC
THIS DOCUMENT IS PRIVATE AND CONFIDENTIAL AND IS SUPPLIED ON THE EXPRESS CONDITION THAT IT IS NOT TO BE USED FOR ANY PURPOSE OR COPIED OR COMMUNICATED TO ANY OTHER PERSON WITHOUT WRITTEN PERMISSION FROM DART AEROSPACE USA, INC.

NO. 252

AWS D17.1.2001
QUALIFICATION TEST RECORD

Name: Barclay Elliott
Job number: 663758
Part number: D206 642 541
Description: 206
Welding Process: Tig[X] Mig[ ]
Base materiel: Aluminum
Current: AC[X] DC[ ]

TEST REQUIREMENTS AND RESULTS

Visual:	pass[X]	fail[ ]
Penetration:	pass[X]	fail[ ]

UNACCEPTABLE

Cracks:	pass[X]	fail[ ]
Undercut:	pass[X]	fail[ ]
Pin holes:	pass[X]	fail[ ]
Overlap (cold lap)	pass[X]	fail[ ]
Porosity (surface):	pass[X]	fail[ ]
Coloration:	pass[X]	fail[ ]

Qualifier [signature] **Date of Test Coupon** 11-05-09

Welder [signature] **Date of Test Coupon** 11-05-09

The above named individual is qualified in accordance with AWS D17.1.2001 to weld